Rewarding Learning

Centre Number

Candidate Number

General Certificate of Secondary Education
2024

# Technology and Design

Unit 2
Option B:
Mechanical and Pneumatic
Control Systems

**[GTY22]**

*GTY22*

**WEDNESDAY 12 JUNE, MORNING**

**TIME**

1 hour 30 minutes.

**INSTRUCTIONS TO CANDIDATES**

Write your Centre Number and Candidate Number in the spaces provided at the top of this page.
**You must answer the questions in the spaces provided.**
**Do not write outside the boxed area on each page or on blank pages.**
Questions which require drawing or sketching should be completed using an H.B. pencil.
All other questions must be completed using black ink only.
**Do not write in pencil or with a gel pen.**
Answer **both** questions.

**INFORMATION FOR CANDIDATES**

The total mark for this paper is 100.
Quality of written communication will be assessed in Question **2(f)**.
Figures in brackets printed down the right-hand side of pages indicate the marks awarded to each question or part question.
The Formula sheet is on page 3.

14079.06**R**

**BLANK PAGE**

**DO NOT WRITE ON THIS PAGE**

**(Questions start on page 4)**

## Formulae for GCSE Technology and Design

**You should use, where appropriate, the formulae given below when answering questions which include calculations.**

1 Gear ratio of a simple gear train $= \dfrac{\text{number of teeth on driven gear}}{\text{number of teeth on driver gear}}$

For a compound gear train:
Total Gear ratio = the product of the gear ratios of all the subsystems
i.e. $GR_T = GR_1 \times GR_2 \times GR_3 \ldots$

2 Velocity Ratio $= \dfrac{\text{Distance moved by effort}}{\text{Distance moved by load}}$ or $\dfrac{\text{Diameter of driven}}{\text{Diameter of driver}}$

3 Mechanical Advantage $= \dfrac{\text{Load}}{\text{Effort}}$

4 Efficiency (%) $= \left(\dfrac{\text{mechanical advantage}}{\text{velocity ratio}}\right) \times 100$

5 Force = Pressure × Area ($F = P \times A$)

6 Circumference of a circle = $\pi$ × diameter

7 Area of a circle = $\pi r^2$

## Answer All Questions

**1** **(a)** Complete **Table 1** by naming each of the mechanical symbols and inserting the appropriate letter from the list opposite to describe its function. Each letter may be used only once.

**Table 1**

| Symbol | Name of symbol | Function |
|---|---|---|
| 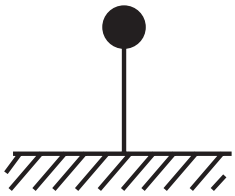 | | |
| 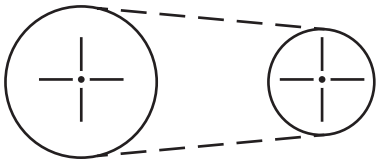 | | |
| 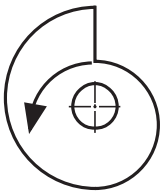 | | |
| 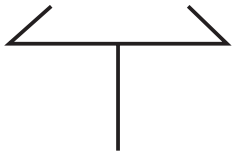 | | |
| 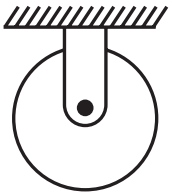 | | |

[10]

**Function**

**A** Allows movement around a point.

**B** To enable the output to rise slowly and fall suddenly.

**C** To change the direction of rotation through 90 degrees.

**D** Transmits motion from one parallel shaft to another.

**E** Changes the direction of the effort to lift a load.

**(b)** **Fig. 1** shows an image of a child's pencil case.

*Source: CCEA*

**Fig. 1**

**(i)** State the name of the linkage shown in **Fig. 1**.

_____ [1]

**(ii)** **Fig. 2** shows a drawing of the linkage in **Fig. 1**. Mark with an **X** the fixed pivot points.

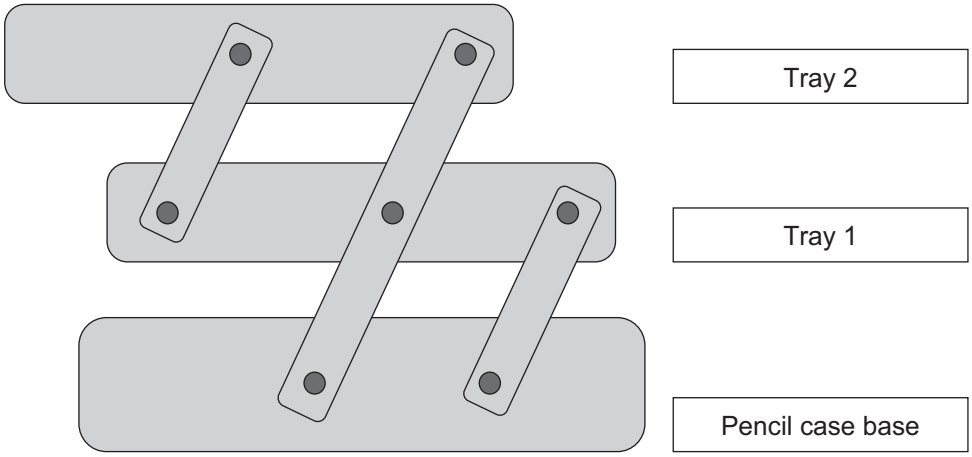


**Fig. 2**

[2]

**(iii)** Outline **two** reasons why this type of design is suitable for the pencil case shown in **Fig. 1**.

1. _____

_____ [1]

2. _____

_____ [1]

**[Turn over**

**(c) (i)** Pulleys and belts are used in many transmission systems. **Table 2** gives three examples of applications for belt drives. Complete **Table 2** by identifying the most appropriate belt from the list given, each belt should be used only once.

**Flat belt** **Toothed belt** **Round belt**

**Table 2**

| Application | Type of belt |
|---|---|
| Vacuum cleaner brush head | |
| Running belt of a treadmill | |
| Timing belt for a car | |

[3]

**(ii)** Complete the sketches in **Fig. 3** to show the belt arrangements needed to transmit the motion shown by the arrows.

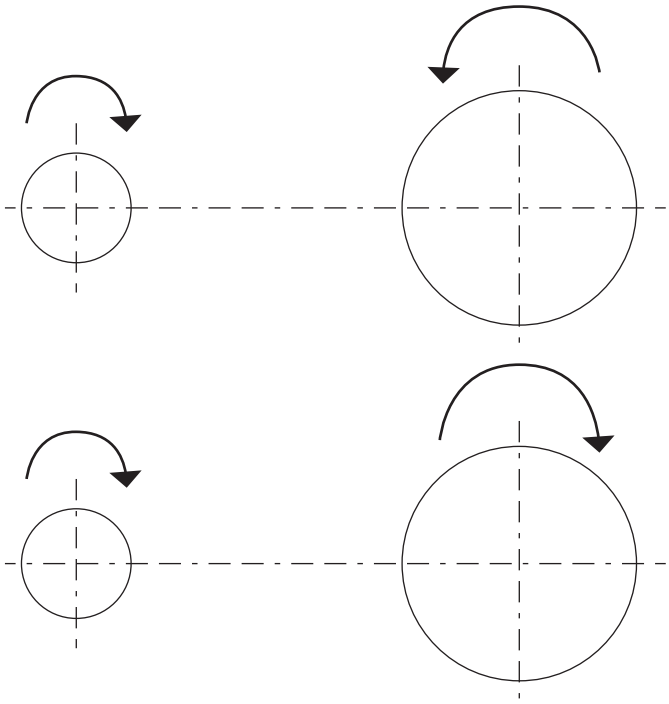

*Source: CCEA*

**Fig. 3**

[2]

**(d)** Pillar drills can be pulley driven or gear driven. **Fig. 4** shows a pulley drive arrangement for a pillar drill.

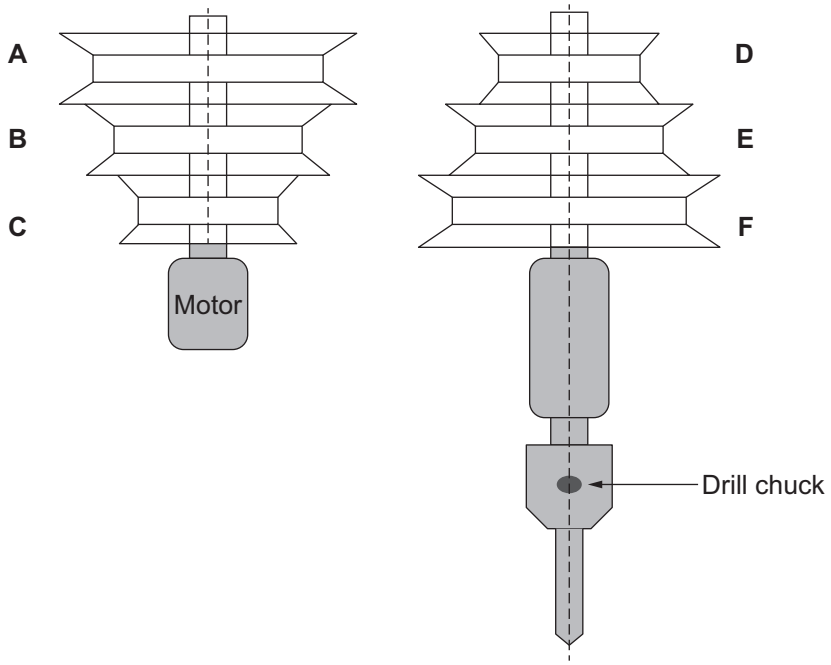


*Source: CCEA*

**Fig. 4**

**(i)** Name a suitable belt that could be used with this pulley drive system.

_____ [1]

**(ii)** Sketch the cross section of the belt that would be used with this pulley drive system.

[1]

**[Turn over**

**(iii)** **Table 3** gives information about this pulley drive arrangement. Assuming a constant motor speed, complete **Table 3**.

**Table 3**

| Name of the Driver pulley | Diameter in mm | Name of the Driven pulley | Diameter in mm | Velocity Ratio | Output speed |
|---|---|---|---|---|---|
| A | 270 | D | 45 | 1:6 | |
| B | | E | 120 | 1:1 | 360 |
| C | 45 | F | 270 | | 60 |

Candidates need to show their working out in the space below.

[3]

The manufacturer has decided to produce a pillar drill with a gear driven system as shown in **Fig. 5**.

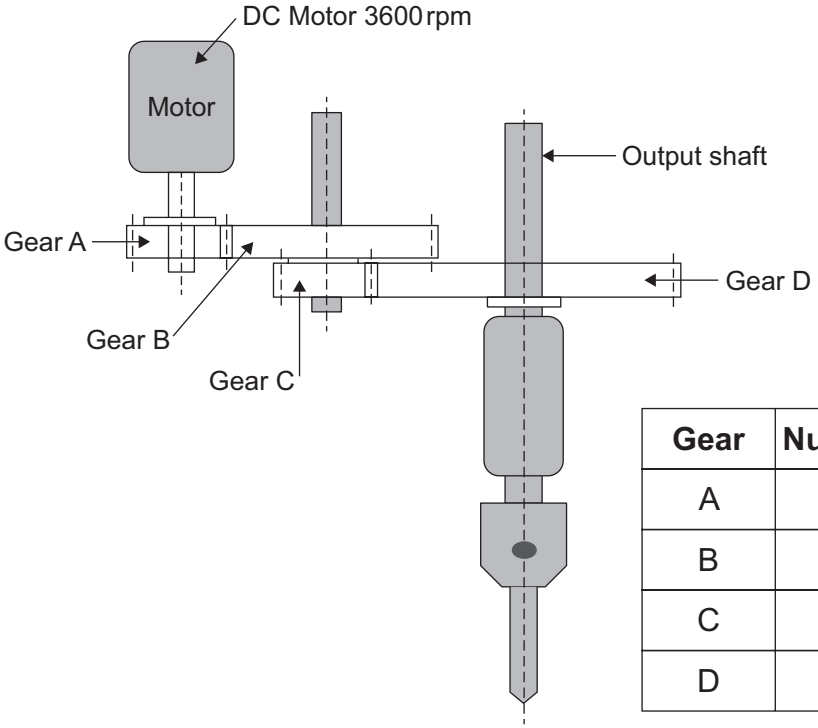


| Gear | Number of teeth |
|---|---|
| A | 30 |
| B | 180 |
| C | 30 |
| D | 240 |

*Source: CCEA*

**Fig. 5**

**(iv)** Calculate the gear ratio for the system in **Fig. 5**.

Candidates need to show their working out in the space below.

Answer _____ [3]

**[Turn over**

**(v)** Calculate the speed of the output gear **D** as shown on **Fig. 5**.

Candidates need to show their working out in the space below.

Answer _____ [2]

The pillar drill has a mechanism for lowering the drill bit into the workpiece as shown in the schematic diagram **Fig. 6**.

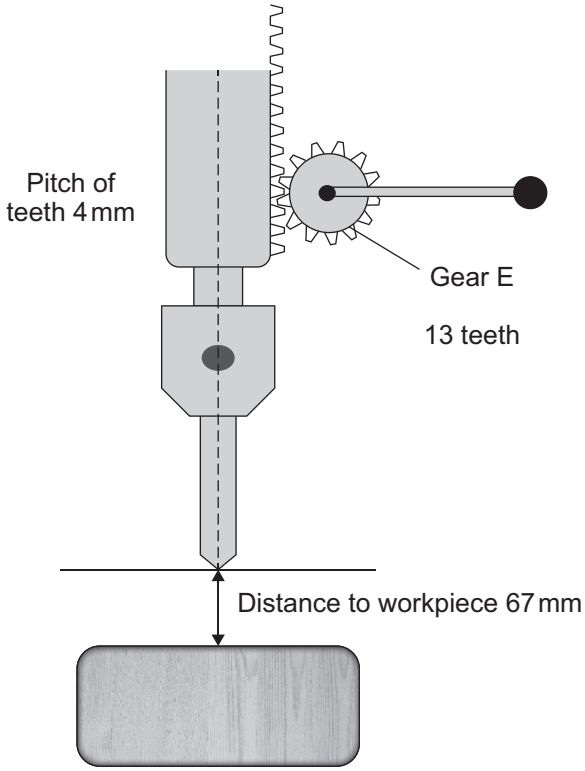


*Source: CCEA*

**Fig. 6**

**(vi)** What is the name of the mechanism for lowering the drill as shown in **Fig. 6**?

_____ [1]

**(vii)** Calculate how many times the handle must be rotated to allow a hole of 50 mm deep to be drilled in the workpiece. Candidates need to show their working out in the space below.

Answer _____ [3]

**[Turn over**

**(e)** **Fig. 7** shows a diagram of a bottle opener in use.

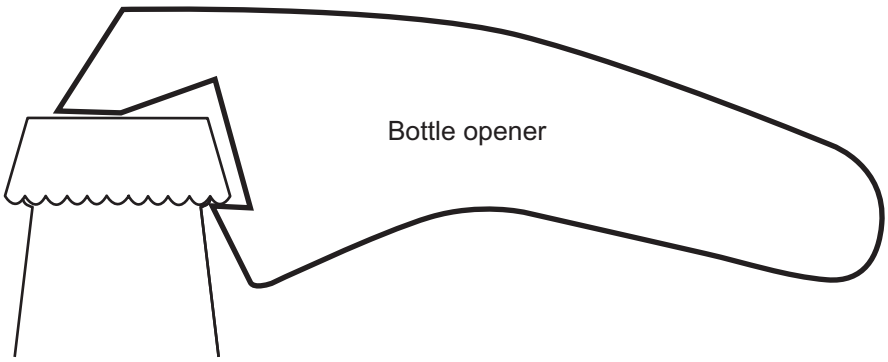


*Source: CCEA*

**Fig. 7**

**(i)** Give **two** reasons why stainless steel would be a suitable material for this bottle opener.

1. _____

2. _____ [2]

**(ii)** On **Fig. 7**, use arrows and labels to identify the fulcrum, load and effort. [3]

**(iii)** State the class of lever shown in **Fig. 7**.

_____ [1]

**(iv)** If a 15 N effort is required by the user to remove the cap, how much force is produced at point **A** as shown in **Fig. 8** below?

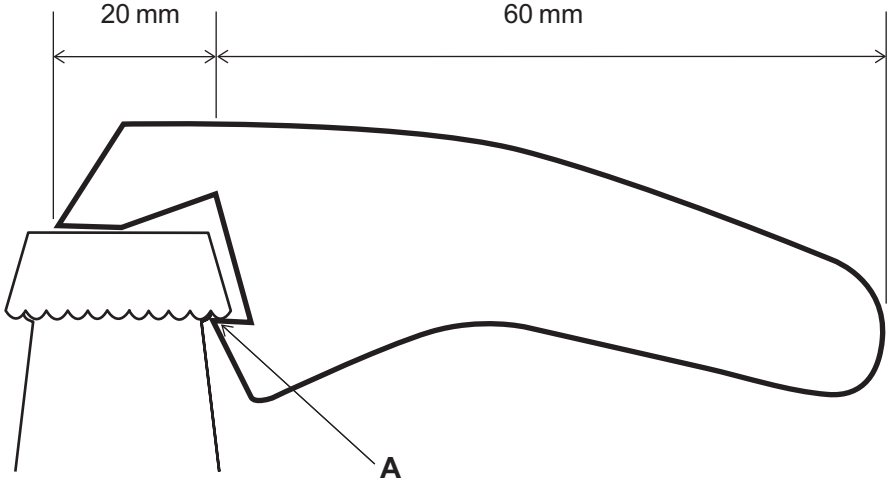


*Source: CCEA*

**Fig. 8**

Candidates need to show their working out in the space below.

Answer _____ [2]

**[Turn over**

**(v)** Calculate the mechanical advantage of the bottle opener shown in **Fig. 8**. Candidates need to show their working out in the space below.

Answer _____ [2]

**(vi)** The effort is required to move 44.8 mm to allow the lid to be removed from the bottle. This will lift the lid by 2.8 mm. Calculate the efficiency of this bottle opener. Candidates need to show their working out in the space below.

Answer _____ [3]

**(vii)** The bottle opener in **Fig. 8** is to be manufactured to allow easier use for elderly people. Show with the aid of a detailed and annotated sketch, or sketches, how this bottle opener could be re-designed to be more user friendly for this market.

[3]

**2** **Table 4** shows the pneumatic symbols for methods of valve actuation.

**(a)** Complete **Table 4** by inserting the correct name for each method of actuation.

**Table 4**

| Symbol | Name of Symbol |
|---|---|
| | |
| | |
| | |
| | |

[4]

**(b)** **Fig. 9** shows a pneumatic component.

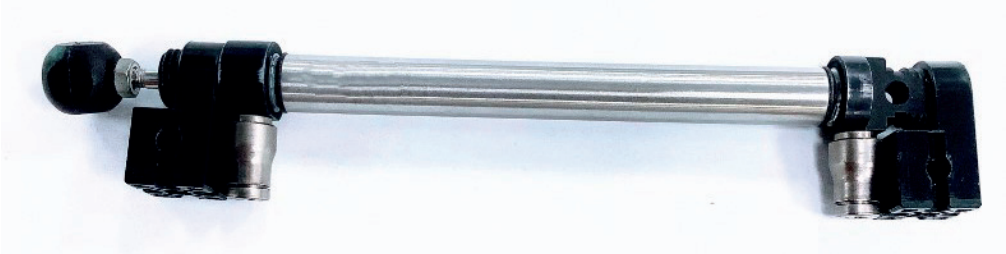

*Source: CCEA*

**Fig. 9**

**(i)** Identify the pneumatic component shown in **Fig. 9**.

_____ [1]

**(ii)** What unique feature helps to identify it?

_____

_____ [1]

**(c)** **Fig. 10** shows a pneumatic circuit used to outstroke and instroke component **B**.

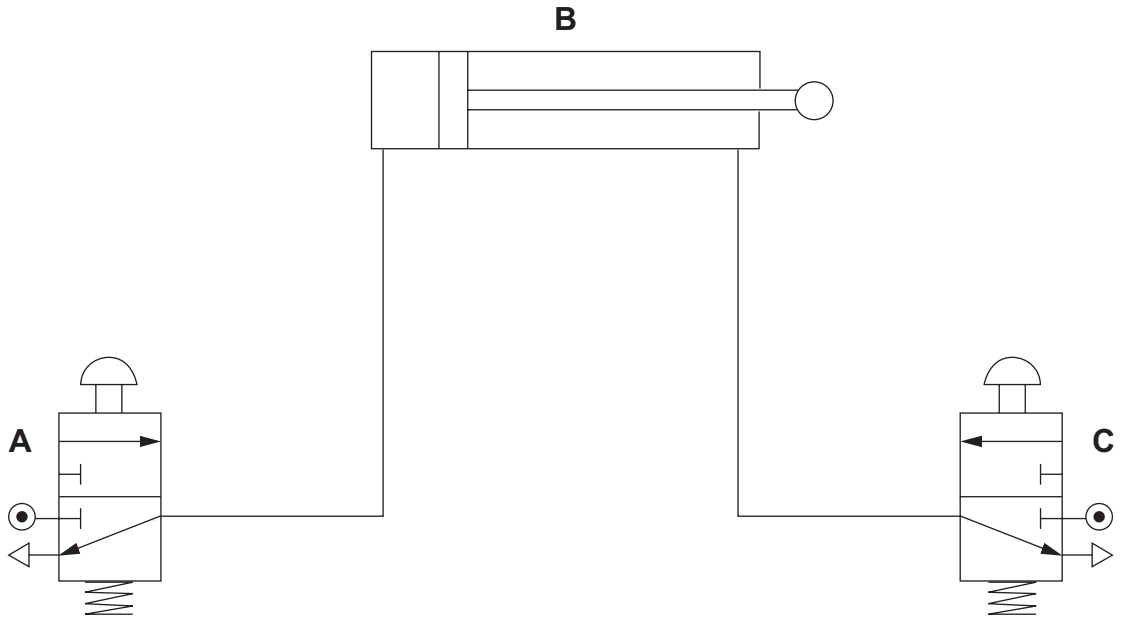


**Fig. 10**

**(i)** Name the component labelled **A**.

_____ [1]

**(ii)** For the component **A** state the:

method of operation: _____

method of return: _____ [2]

**(iii)** It was found that the speed of operation of component **B** was too fast. Modify **Fig. 10** to enable the outstroke and instroke of component **B** to be controlled. [3]

**(iv)** Which component controls the outstroke? _____ [1]

Which component controls the instroke? _____ [1]

**(v)** A total force of 500 N is needed to outstroke component **B**. The diameter of component **B** is 50 mm. Calculate, in $N/mm^2$, the air pressure required to outstroke component **B**.
Candidates need to show their working out in the space below.

Answer _____ [3]

**(vi)** If the air pressure does not change, what force will be exerted on the instroke of component **B**, if the diameter of the piston rod is 10 mm?
Candidates need to show their working out in the space below.

Answer _____ [4]

**[Turn over**

**(d)** **Fig. 11** shows a pneumatic circuit used in an airport luggage carousel.

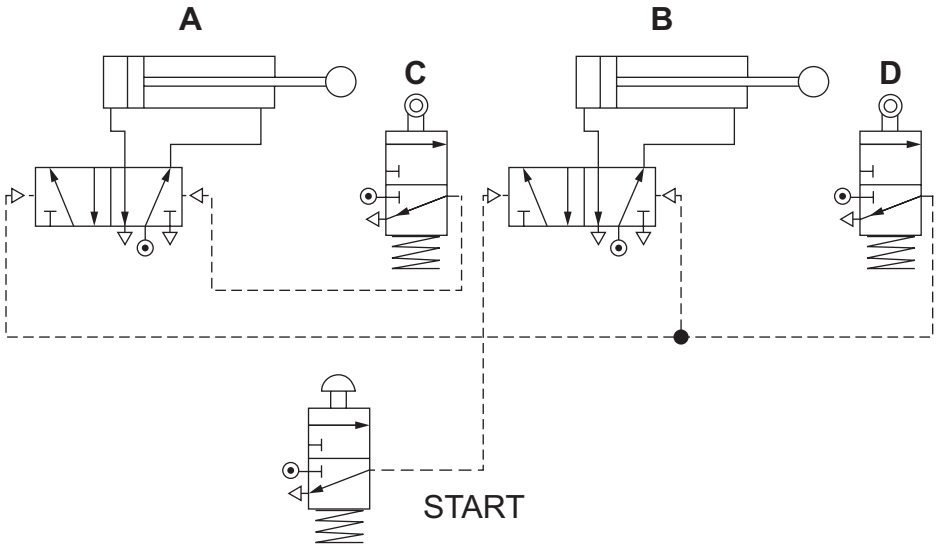


**Fig. 11**

**(i)** The statements in boxes **1** to **6** describe how the circuit in **Fig. 11** operates. Place the number from the correct statement, in the correct order in the flow diagram below. The first has been done for you.

| | | |
|---|---|---|
| **1** Roller trip 3PV **D** is activated. | **2** Roller trip 3PV **C** is activated. | **3** Start component is activated. |
| **4** Cylinder **B** outstrokes. | **5** Cylinder **A** instrokes. | **6** Cylinder **B** instrokes and **A** outstrokes. |

**3** → [ ] → [ ] → [ ] → [ ] → [ ]

[5]

**(ii)** Cylinder **B** instrokes and Cylinder **A** outstrokes simultaneously. What component in **Fig. 11** enables this to happen?

_____ [1]

**(e)** **Fig. 12** shows part of a pneumatic circuit used in a factory to press potatoes into chips.

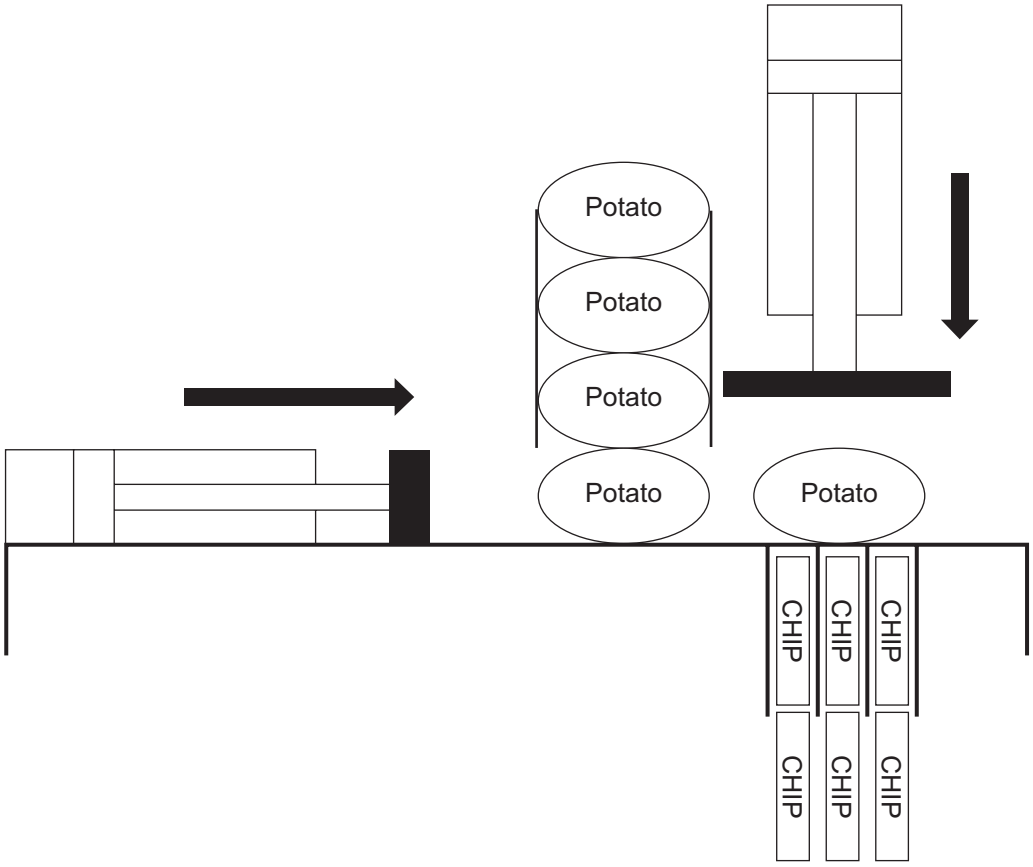


**Fig. 12**

The method of actuation for **Fig. 12** is shown in **Fig. 13**.

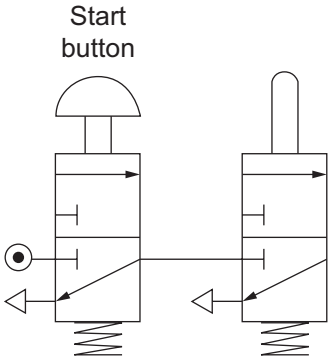


**Fig. 13**

**[Turn over**

**(i)** State the logic shown in **Fig. 13**.

_____ [1]

**(ii)** Give a reason for this type of logic connection.

_____

_____ [1]

**(iii)** **Fig. 14** shows part of an incomplete pneumatic circuit used to cut the potatoes as shown in **Fig. 12**.

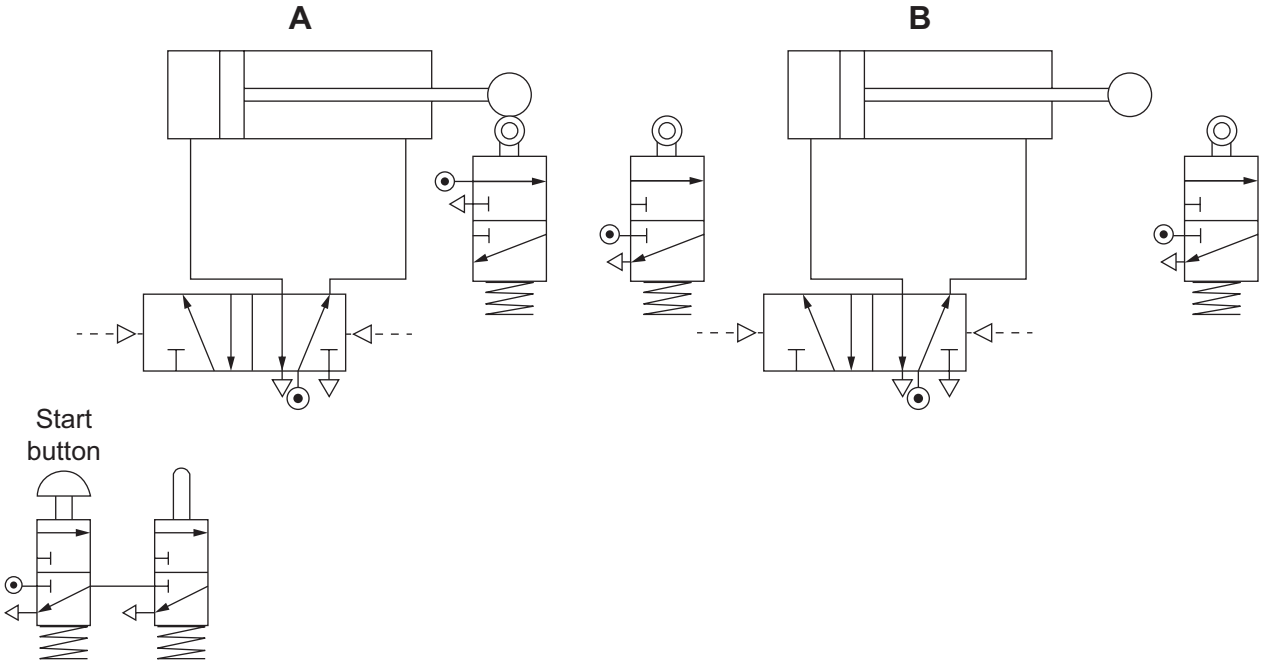


**Fig. 14**

When complete, the sequence of operation should be:
1: Starting actuators are pressed.
2: Cylinder **A** outstrokes.
3: Cylinder **B** outstrokes.
4: Cylinder **A** instrokes.
5: When cylinder **A** is fully retracted cylinder **B** instrokes.

State the logic sequence for the above circuit.

_____ [1]

**(iv)** Complete the circuit on **Fig. 14** to give the required sequence described for the potato chipper.

[9]

**(v)** During operation it was found that there was not enough time between the potato being pushed forward by cylinder **A** and cylinder **B** pressing it into chips. Describe how the circuit in **Fig. 14** could be modified to overcome this problem.

_____

_____

_____

_____

_____

_____

_____ [3]

**(f)** Over the last decade there has been a rapid increase in the demand for industrial robots in manufacture. Discuss **two** reasons why a manufacturer would be reluctant to introduce robotic manufacturing to the factory production line. Discuss **two** reasons why it may be beneficial to a manufacturing business.

**Quality of written communication will be assessed in this question.**

_____

_____

_____

_____

_____

_____

_____

[8]

**THIS IS THE END OF THE QUESTION PAPER**

**DO NOT WRITE ON THIS PAGE**

| For Examiner's use only | |
|---|---|
| Question Number | Marks |
| 1 | |
| 2 | |
| Total Marks | |

Examiner Number

Permission to reproduce all copyright material has been applied for.
In some cases, efforts to contact copyright holders may have been unsuccessful and CCEA will be happy to rectify any omissions of acknowledgement in future if notified.